Turbo-BLAST and its Performance

A. van Zelst

Wireless Systems Research, Agere Systems
Zadelstede 1-10, 3431 JZ Nieuwegein, the Netherlands, Email: zelst@agere.com

R. van Nee and G.A. Awater

Woodside Networks
Email:
{vannee,awater}@woodsidenet.com

Abstract

Recent research has shown that the performance of demapping a multilevel modulated signal can be improved by using anti-Gray mapping and iterative demapping and decoding. Iterative demapping and decoding is based on the turbo-decoding principle. In order to improve the performance of the Multi-Input Multi-Output (MIMO) Bell-Labs Layered Space Time (BLAST) wireless communication algorithm, the combination of BLAST and iterative decoding is examined. This principle will be called Turbo-BLAST. Turbo-BLAST will be evaluated using the Extrinsic Information Transfer (EXIT) chart method recently appeared in literature.

1. Introduction

BLAST (Bell labs Layered Space Time) has shown to be a promising wireless communication technique that can achieve tremendous bandwidth efficiencies, provided that the multipath scattering is sufficiently rich and properly exploited [2]. Basically, the idea is to transmit different signals simultaneously on different antennas that are spaced at least half a wavelength apart. Due to the richly scattered environment, the parallel streams of data are mixed-up it the air, but can be recovered with a number of BLAST algorithms (see [3]) when using multiple antennas at the receiver as well. Currently, a lot of research is ongoing to high performance (and low complexity) BLAST algorithms.

In [1, 4], it has been shown that the performance of demapping a multilevel modulated signal (e.g., like QSPK or 16-QAM) can be improved by using iterative demapping and decoding, based on the turbo-decoding principle. In this paper, we extend the iterative demapping idea from a single-transmit single-receive wireless communication system to the multi-transmit multi-receive case. Since this idea is based on the turbo-coding principle [5], it will be called Turbo-BLAST.

Following [1], the proposed method can be regarded as a serially concatenated iterative decoding scheme whereby the inner decoder is replaced by a (soft) BLAST-demapping device accepting *a priori* information. This leads to almost the same system configuration as described in [1], except that the "regular" (de)mapper is replaced by a BLAST (de)mapper as shown in Figure 1.

The term Turbo-BLAST is mentioned for the first time (to our knowledge) in [6]. We present basically the same idea but we use convolutional codes instead of block codes as outer code and we will use the promising Extrinsic Information Transfer (EXIT) chart method [4] to evaluate the performance of Turbo-BLAST.

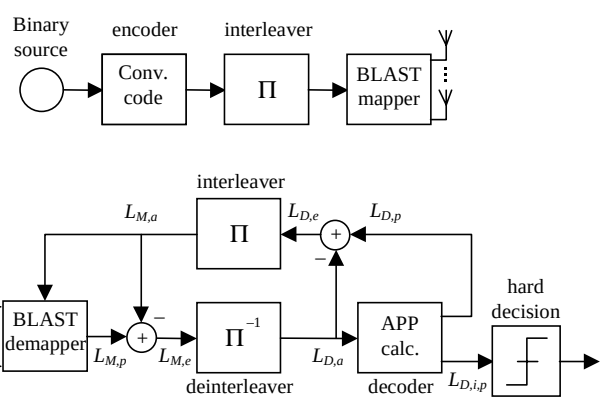

Figure 1: Turbo-BLAST system configuration.

2. System configuration

In this section, the system configuration of Figure 1 will be described in more detail. Throughout this paper, it is assumed that the system operates in a Rayleigh flat-fading environment, with changing channel characteristics for every transmitted symbol, unless mentioned otherwise.

Starting at the transmitter, the bits from the binary source are encoded using a non-systematic convolutional code and passed through a pseudo-random interleaver. Then they are mapped onto a BLAST vector by the BLAST mapper. Assuming that the transmitter comprises N_t transmit (TX) antennas, the interleaved coded bits are

demultiplexed, mapped (either using Gray mapping or anti-Gray mapping) and sent in parallel on the N_t TX antennas (see Figure 2). This TX vector will be represented by the N_t-dimensional complex vector **s**.

At the receiver, the N_r receive (RX) antennas record an N_r-dimensional complex vector **x**. The following signal model describes the relation between **s** and **x**:

$$\mathbf{x} = \mathbf{H}\mathbf{s} + \mathbf{n} \tag{1}$$

where **H** is an $N_r \times N_t$ complex propagation matrix that is constant with respect to the symbol time and assumed known at the receiver (e.g. via transmitting training sequences). Since it is assumed that the system operates in a Rayleigh flat-fading environment, it can be said that **H** has independent and identically distributed (i.i.d.), zero-mean, complex Gaussian entries with unit variance (the variance of each entry is $\sigma_c^2 = 1$).

The N_r-dimensional vector **n** represents zero mean, complex Additive White Gaussian Noise (AWGN) with covariance matrix:

$$E[\mathbf{n}\mathbf{n}^H] = \sigma_n^2 \mathbf{I}_{N_r} \tag{2}$$

where ^{H} denotes the conjugate transpose of a matrix. The matrix **I** with subscript N_r represents the identity matrix with dimension N_r. The total power of **s** (i.e., $E[\mathbf{s}^H\mathbf{s}]$) is assumed to be P (independent of the number of transmit antennas!). Thus, per TX antenna, an average power of P/N_t is sent. Furthermore, the vectors **s** and **n** are assumed to be independent ($E[\mathbf{s}\mathbf{n}^H]=0$). Now, the expected Signal-to-Noise Ratio (SNR) per receiving antenna, i.e. the SNR for each component of **x**, can be found and is equal to:

$$\rho = \frac{E_s}{N_0} = \frac{P\sigma_c^2}{\sigma_n^2} = \frac{P}{\sigma_n^2} \tag{3}$$

where E_s stands for the signal power per RX antenna and N_0 denotes the noise power per RX antenna.

In the BLAST demapper, the RX vector **x** is demapped by a log-likelihood ratio calculation for all of the coded bits included in TX vector **s**. After deinterleaving and soft-decision input/soft-decision output decoding with an *A Posteriori* Probability (APP) decoder [7], the estimates on the transmitted information bits are available at the output of the hard decision block. In the iterative demapping/ decoding path, extrinsic information $L_{D,e}$ from the decoder is interleaved and fed back as *a priori* values $L_{M,a}$ to the soft-input/soft-output BLAST demapper. The extrinsic information at the decoder is the difference of the soft-input and the soft-output log-likelihood values (L-values [8]) on the coded bits; $L_{D,e} = L_{D,p} - L_{D,a}$. The demapper utilises the extrinsic information from the decoder and calculates improved *a posteriori* values $L_{M,p}$, which are passed as $L_{M,e} = L_{M,p} - L_{M,a}$ to the decoder for further, iterative decoding steps. $L_{M,e}$ is the difference between *a priori* and *a posteriori* L-values at the demapper and consists of channel information and extrinsic information.

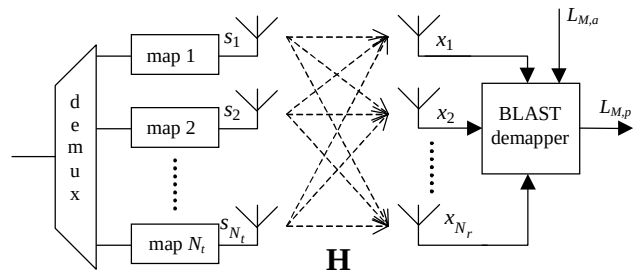

Figure 2: The physical model of a BLAST communication channel.

3. Soft-input/Soft-output MLD

In this paper, we have chosen to show the performance of Turbo-BLAST in combination with an ideal BLAST demapper, called the Soft-input/Soft-output Maximum Likelihood Decoder (MLD). To produce soft-decision outputs with MLD, the same approach as [8] is used. There, the log-likelihood ratio is used as an indication for the reliability of a bit. If b_k is the k-th bit of TX vector **s** to estimate, then the $L_{M,p}$-value of the estimated bit is:

$$\begin{aligned} L_{M,p}(b_k) &= \ln \frac{P(b_k = +1|\mathbf{x})}{P(b_k = -1|\mathbf{x})} \\ &= \ln \frac{\sum_{\mathbf{s}_j|b_k=+1} P(\mathbf{s}_j|\mathbf{x})}{\sum_{\mathbf{s}_j|b_k=-1} P(\mathbf{s}_j|\mathbf{x})} = \ln \frac{\sum_{\mathbf{s}_j|b_k=+1} p(\mathbf{x}|\mathbf{s}_j)P(\mathbf{s}_j)}{\sum_{\mathbf{s}_j|b_k=-1} p(\mathbf{x}|\mathbf{s}_j)P(\mathbf{s}_j)} \end{aligned} \tag{4}$$

where $1 \le j \le J$, with $J = Q^{N_t}$ and Q equals the number of constellation points. For a BLAST system with two TX and two RX antennas, $(N_t,N_r) = (2,2)$, and QPSK mapping, the L-value of e.g. bit b_1 conditioned on the received vector, is given by Equation (5), where **b** represents the transmitted coded bits in vector format $[b_1\ b_2\ b_3\ b_4]$.

Owing to the bit interleaver in between the encoder and the BLAST mapper, the coded TX bits can be assumed to be independent. Thus we can write joint probabilities as product terms, e.g., $P(b_0 = 1, b_1 = 1) = P(b_0 = 1)\cdot P(b_1 = 1)$. So, applying Bayes' rule, Eq. (5) results in Eq. (6), where $L_a(b_k) = \ln(P(b_k = 1) / P(b_k = -1))$. By assuming the *a priori* soft values $L_a(b_k)$ to be available as input, a BLAST demapper accepting *a priori* values can be implemented. To remove statistically dependent information for further, iterative decoding steps, the additive term $L_a(b_1)$ in Eq. (6)

$$L_{M,p}(b_1|\mathbf{x}) = \ln\frac{P(b_1=1|\mathbf{x})}{P(b_1=0|\mathbf{x})} = \ln\frac{P(\mathbf{b}=[1\ \ 0\ \ 0\ \ 0]|\mathbf{x}) + P(\mathbf{b}=[1\ \ 0\ \ 0\ \ 1]|\mathbf{x}) + \ldots + P(\mathbf{b}=[1\ \ 1\ \ 1\ \ 1]|\mathbf{x})}{P(\mathbf{b}=[0\ \ 0\ \ 0\ \ 0]|\mathbf{x}) + P(\mathbf{b}=[0\ \ 0\ \ 0\ \ 1]|\mathbf{x}) + \ldots + P(\mathbf{b}=[0\ \ 1\ \ 1\ \ 1]|\mathbf{x})} \tag{5}$$

$$L_{M,p}(b_1|\mathbf{x}) = L_a(b_1) + \ln\frac{p(\mathbf{x}|\mathbf{b}=[1\ \ 0\ \ 0\ \ 0]) + \ldots + p(\mathbf{x}|\mathbf{b}=[1\ \ 1\ \ 1\ \ 1])\exp(L_a(b_2)+L_a(b_3)+L_a(b_4))}{p(\mathbf{x}|\mathbf{b}=[0\ \ 0\ \ 0\ \ 0]) + \ldots + p(\mathbf{x}|\mathbf{b}=[0\ \ 1\ \ 1\ \ 1])\exp(L_a(b_2)+L_a(b_3)+L_a(b_4))} \tag{6}$$

$$L_{M,p}(b_k|\mathbf{x}) = L_a(b_k) + \ln\frac{\sum_{i=0}^{2^{K-1}-1}\exp\left(-\frac{\left\|\mathbf{x}-\mathbf{H}\cdot\mathrm{map}\left(\left[(\mathbf{c}_i)_{1:k-1}\quad 1\quad (\mathbf{c}_i)_{k:K-1}\right]\right)\right\|^2}{\sigma_n^2}\right)\exp(\mathbf{b}_i\mathbf{L}_a)}{\sum_{i=0}^{2^{K-1}-1}\exp\left(-\frac{\left\|\mathbf{x}-\mathbf{H}\cdot\mathrm{map}\left(\left[(\mathbf{c}_i)_{1:k-1}\quad 0\quad (\mathbf{c}_i)_{k:K-1}\right]\right)\right\|^2}{\sigma_n^2}\right)\exp(\mathbf{b}_i\mathbf{L}_a)} \tag{10}$$

is dropped to get $L_{M,e}$, i.e., to gain the 'extrinsic' and channel information [8] of the demapping device.

More general, for K coded bits, with $K = N_t \cdot Q$, the soft value of the k-th bit can be obtained as follows:

$$L(b_k|\mathbf{x}) = L_a(b_k) + \ln\frac{\sum_{i=0}^{2^{K-1}-1} p(\mathbf{x}|b_k=1,\mathbf{b}_{\backslash k}=\mathbf{c}_i)\exp(\mathbf{c}_i\mathbf{L}_a)}{\sum_{i=0}^{2^{K-1}-1} p(\mathbf{x}|b_k=0,\mathbf{b}_{\backslash k}=\mathbf{c}_i)\exp(\mathbf{c}_i\mathbf{L}_a)} \tag{7}$$

where $\mathbf{L}_a = [L_a(b_1)\ \cdots\ L_a(b_{k-1})\ L_a(b_{k+1})\ \cdots\ L_a(b_K)]^T$, $\mathbf{c}_i \equiv \mathrm{bin}(i)$ and $\mathbf{b}_{\backslash k} = [b_1\ \cdots\ b_{k-1}\ b_{k+1}\ \cdots\ b_K]$, with ^{T} denoting the transpose of a matrix. Furthermore, bin(i) is a row vector having the values 0 and 1 according to the binary representation of i. Finally, for MLD and for a given channel matrix $\mathbf{H}$, the conditional probability density function can be shown to be [9]:

$$p(\mathbf{x}|\mathbf{H},\mathbf{s}_j) = \det(\pi\mathbf{Q})^{-1} e^{-(\mathbf{x}-\mathbf{H}\mathbf{s}_j)^H\mathbf{Q}^{-1}(\mathbf{x}-\mathbf{H}\mathbf{s}_j)} \tag{8}$$

where covariance matrix $\mathbf{Q}$ equals:

$$\begin{aligned}\mathbf{Q} &= E[(\mathbf{x}-\boldsymbol{\mu})(\mathbf{x}-\boldsymbol{\mu})^H] \\ &= E\left[(\mathbf{x}-\mathbf{H}\mathbf{s}_j)(\mathbf{x}-\mathbf{H}\mathbf{s}_j)^H\right] = E\left[\mathbf{n}\mathbf{n}^H\right] = \sigma_n^2\mathbf{I}_{N_r}\end{aligned} \tag{9}$$

This leads to the soft-output decisions given by Equation (10), where map(.) denotes the BLAST mapping of the representing bit vector and results in $\mathbf{s}_j|b_k = 0$ or $\mathbf{s}_j|b_k = 1$ (see Equation (4)), corresponding to the value to which b_k is set. Furthermore, $(\mathbf{c}_i)_{a:b}$ denotes the a-th up to and including the b-th element of $(\mathbf{c}_i)$. The result of Equation (10) can be approximated by the max-log or the Jacobian-log approximation as described in [7].

4. EXIT characteristics of demapper

To evaluate the performance of Turbo-BLAST we will use the Extrinsic Information Transfer (EXIT) chart method as described in [4]. In this method, the idea is to predict the iterative decoding behaviour by solely looking at the input/output relations of the demapper and decoder in terms of bitwise mutual information.

The *a posteriori* bitwise mutual information of the BLAST demapper $I_{M,e}$ is a function of the *a priori* bitwise mutual information $I_{M,a}$ and the E_b/N_0 per RX antenna

$$I_{M,e} = f(I_{M,a}, E_b/N_0) \tag{11}$$

With equiprobable binary input symbols B to the mapper, the bitwise mutual information [4] is calculated as

$$I_{M,a} = \tfrac{1}{2}\sum_{b=0}^{1}\int_{-\infty}^{\infty} p_{M,a}(\xi|B=b) \times \ln\frac{2p_{M,a}(\xi|B=b)}{p_{M,a}(\xi|B=0)+p_{M,a}(\xi|B=1)}d\xi \tag{12}$$

For $N_t \cdot Q$ bits per mapped BLAST vector, the *a posteriori* bitwise mutual information is

$$I_{M,e} = \frac{1}{N_tQ}\sum_{k=0}^{N_tQ-1} I_{M,e,k}\ \text{, and} \tag{13}$$

$$I_{M,e,k} = \tfrac{1}{2}\sum_{b=0}^{1}\int_{-\infty}^{\infty} p_{M,e,k}(\xi|B=b) \times \ln\frac{2p_{M,e,k}(\xi|B=b)}{p_{M,e,k}(\xi|B=0)+p_{M,e,k}(\xi|B=1)}d\xi \tag{14}$$

The conditional probability distributions $p_{M,a}$ of $L_{M,a}$ and $p_{M,e,k}$ of $L_{M,e,k}$ to calculate $I_{M,a}$ and $I_{M,e,k}$ are obtained by simulations. In [4] it is stated that the EXIT characteristics prove to be very robust due to the robustness of the entropy measure, because when different distributions $p_{M,a}$ were used to calculate the demapper EXIT characteristics hardly any changes were noticed in the shape of the characteristics. This justifies the idea that the *a priori* input $L_{M,a}$ can be modelled by an independent Gaussian random variable n_L with zero means and variance σ_L^2:

$$L_{M,a} = \mu_L b + n_L \tag{15}$$

where $b \in \{-1,1\}$ represents the corresponding transmitted coded bit. Since $L_{M,a}$ is an L-value based on Gaussian distributions it can be shown [8] that μ_L equals $\sigma_L^2/2$. With the conditional probability density function of $L_{M,a}$, $I_{M,a}$ can be determined according to Eq. (12). Now, the EXIT characteristics of the BLAST demapper can be found with Eq. (11) as a function of $I_{M,a}$ or σ_L^2.

Iterative demapping and decoding can be applied to any multilevel/multiphase modulation scheme such as PAM, PSK or any QAM [1]. In this paper, we will only focus on QSPK, either with Gray mapping or anti-Gray mapping.

The EXIT characteristics of the BLAST demapper for different mappings, SNRs and antenna configurations for AWGN and flat-fading channels are depicted in Figure 3 and Figure 4, respectively, where for (N_t,N_r) = (2,2) and AWGN, we used the channel matrix $\mathbf{H}$ = [1 1; 1 –1].

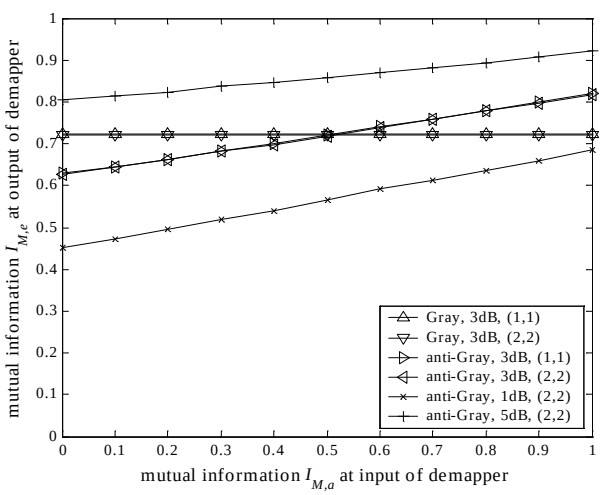

Figure 3: EXIT characteristics of QPSK BLAST demapper operating in AWGN for different mappings, E_b/N_0 (at code rate 1:2) and (N_t,N_r).

A number of things can be noticed from the demapper transfer characteristics. First of all, note that the characteristics are almost straight lines. Second, keeping the mapping and antenna configuration (N_t,N_r) fixed, different E_b/N_0 values just shift the curve up and down (note that for large E_b/N_0, the slope is also affected, see the 5 dB curve in Figure 3). Third, keeping the SNR fixed, different mappings and/or antenna configurations result in lines of different slope. Fourth, for AWGN, for (N_t,N_r) = (1,1) and (2,2), the results are the same, which seems logical when choosing $\mathbf{H}$ = [1 1; 1 –1] and dividing the power equally on the two TX antennas in the latter case. Finally, the curves in Figure 3 and Figure 4 with non-horizontal slopes unveil the big potential performance improvements in an iterative demapping and decoding scheme compared to the configurations resulting in horizontal transfer characteristics.

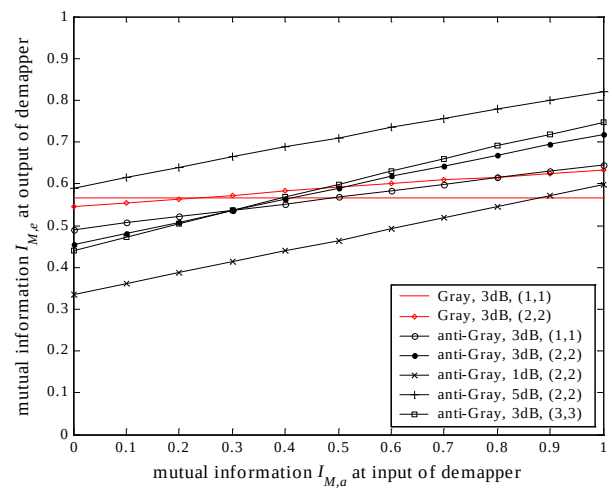

Figure 4: EXIT characteristics of QPSK BLAST demapper in Rayleigh flat-fading for different mappings, E_b/N_0 (at code rate ½) and (N_t,N_r).

5. Simulation results

In all simulations, we used a half rate, memory 4 non-systematic convolutional code with generator polynomials (G_1,G_2) = (023,035) (octal notation) as outer code. Following the analysis of Equations (12)-(14), the decoder transfer characteristic on the coded bits is defined as $I_{D,e} = f(I_{D,a})$. Because the demapper and decoder are only connected by the interleavers, the extrinsic output of the demapper becomes the *a priori* input of the decoder $I_{D,a} = I_{M,e}$ and vice versa $I_{M,a} = I_{D,e}$. This exchange of extrinsic information can be visualised in the so called EXIT-chart. When the pseudo-random interleaver size is set to 1000 coded bits, for Rayleigh flat-fading, QPSK, anti-Gray mapping, E_b/N_0 = 3 dB per RX antenna and (N_t,N_r) = (2,2), this results in the EXIT-chart shown in Figure 5.

From Figure 5 a number of things can be seen. First of all, following the trajectory for E_b/N_0 = 3dB, the Turbo-BLAST system appears to converge after 4 or 5 iterations. Second, the Bit Error Rate (BER) floor at this SNR is

approximately equal to 0.001 as can be found at the intersection of curve 'a' and 'b' (read off from the BER contour plots, obtained from [10] with $\sigma_Z^2 = 0$). Third, when the SNR goes down, curve 'a' is also shifting downwards. This narrows the tunnel between curve 'a' and 'b'. At a certain SNR, the tunnel is blocked. At this SNR, the turbo cliff starts in the Bit Error Rate (BER) curve. For the example of Figure 5, this is around 1.5 dB (which can be verified with Figure 6). Fourth, the real trajectory after 3 iterations ends in a BER of around 0.01, which also can be verified with Figure 6.

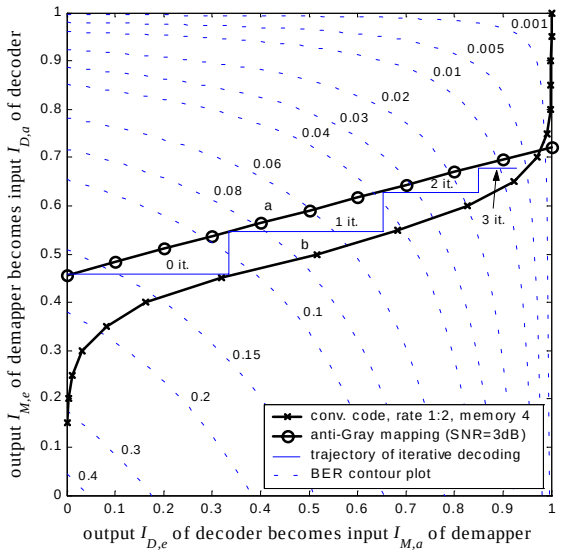

Figure 5: Simulated EXIT characteristics and real trajectory of iterative decoding for QPSK, anti-Gray mapping, E_b/N_0 = 3dB, rate ½ memory 4 code and (N_t,N_r) = (2,2).

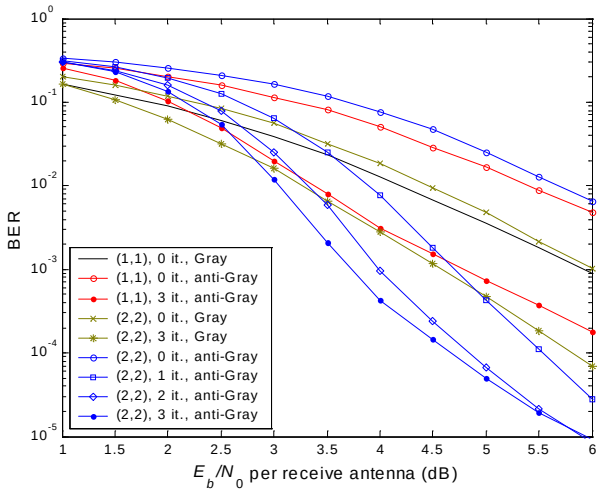

Figure 6: BER performance a Rayleigh flat-fading channel for QPSK, rate ½ memory 4 code, different mappings and antenna configurations.

Finally, according to Figure 4, the slope of curve 'a' changes by changing (N_t,N_r). So, for other antenna configurations, in order to find the optimal performing system, the decoder configuration needs to be adapted.

6. Conclusions

The iterative demapping and decoding scheme described in [1] is extended to a multi-transmitter multi-receiver case using BLAST. This extended scheme is called Turbo-BLAST. The Extrinsic Information Transfer (EXIT) chart method has been successfully used to evaluate the performance of Turbo-BLAST and to provide insight into the turbo cliff position and BER floor. Overall, it can be concluded that applying iterative demapping and decoding to the multi-transmitter multi-receiver case outperforms the single-transmit single-receive antenna system in terms of BER.

Acknowledgement

We would like to express our gratitude to S. ten Brink for his constructive comments.

Reference

[1] S. ten Brink, J. Speidel and R.-H. Yan, "Iterative Demapping and Decoding for Multilevel Modulation", *IEEE GLOBECOM 1998*, vol. 1, Nov. 1998, pp. 579-584.

[2] G.J. Foschini, "Layered Space-Time Architecture for Wireless Communication in a Fading Environment When Using Multi-Element Antennas", *Bell Labs Technical Journal*, vol. 1, no. 2, autumn 1996.

[3] A. van Zelst, "Space Division Multiplexing Algorithms", *10th Mediterranean Electrotechnical Conf. (MELECON) 2000*, Cyprus, May 2000, Vol. 3, pp. 1218-1221.

[4] S. ten Brink, "On the Convergence of Iterative Decoding", electronic letters, vol. 35, no. 10, May 1999, pp. 806-808.

[5] C. Berrou, A. Glavieux and P. Thitimajshima, "Near Sheannon Limit Error-correcting Coding and Decoding: Turbo-codes", *Proc. ICC'93*, May 1993, pp. 1064-1070.

[6] M. Sellathurai and S. Haykin, "Turbo-BLAST for High-Speed Wireless Communications", *Wireless Comm. and Network Conf. 2000, WCNC 2000*, Sept. 2000, Chicago.

[7] P. Robertson, E. Villebrun and P. Hoeher, "A Comparison of Optimal and Sub-optimal MAP Decoding Algorithms in the Log Domain", *Proc. ICC '95*, June 1995, pp. 1009-1013.

[8] J. Hagenauer, E. Offer and L. Papke, "Iterative Decoding of Binary Block and Conventional Codes", *IEEE Trans. on Info. Theory*, vol. 42, March 1996, no. 2, pp. 429-445.

[9] A. van Zelst, R. van Nee and G.A. Awater, "Space Division Multiplexing (SDM) for OFDM systems", *51st IEEE Vehicular Technology Conf. (VTC) 2000-Spring Proc.*, Tokyo, May 2000, Vol. 2, pp. 1070-1074.

[10] S. ten Brink, "Iterative Decoding Trajectories of Parallel Concatenated Codes", *3rd IEEE/ITG Conf. on Source and Channel Coding*, Munich, Jan. 2000.